NOTES:

1. INSTALL IN FIELD OR WOODED AREAS AS REQUIRED BY SLSA.
2. PLACEMENT OF POSTS SHALL BE AS SHOWN ON THE PLAN WITH RESPECT TO THE ALIGNMENT OF THE SANITARY SEWER LINE AND THE DIRECTION OF FLOW.
3. POSTS SHALL BE INSTALLED WITHIN THE RIGHT-OF-WAY.
4. IF A POST CANNOT BE LOCATED AS SHOWN ON THE PLAN, THE LOCATION SHALL BE APPROVED BY SLSA.
5. PAINT POST WITH TWO COATS OF YELLOW EPOXY PAINT.

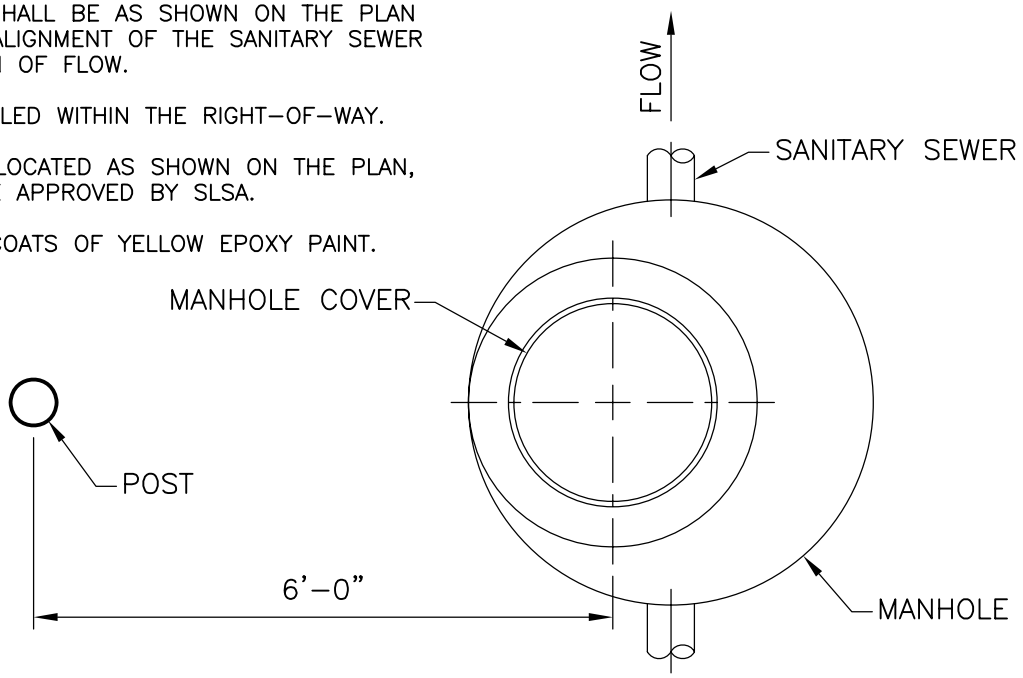

PLAN

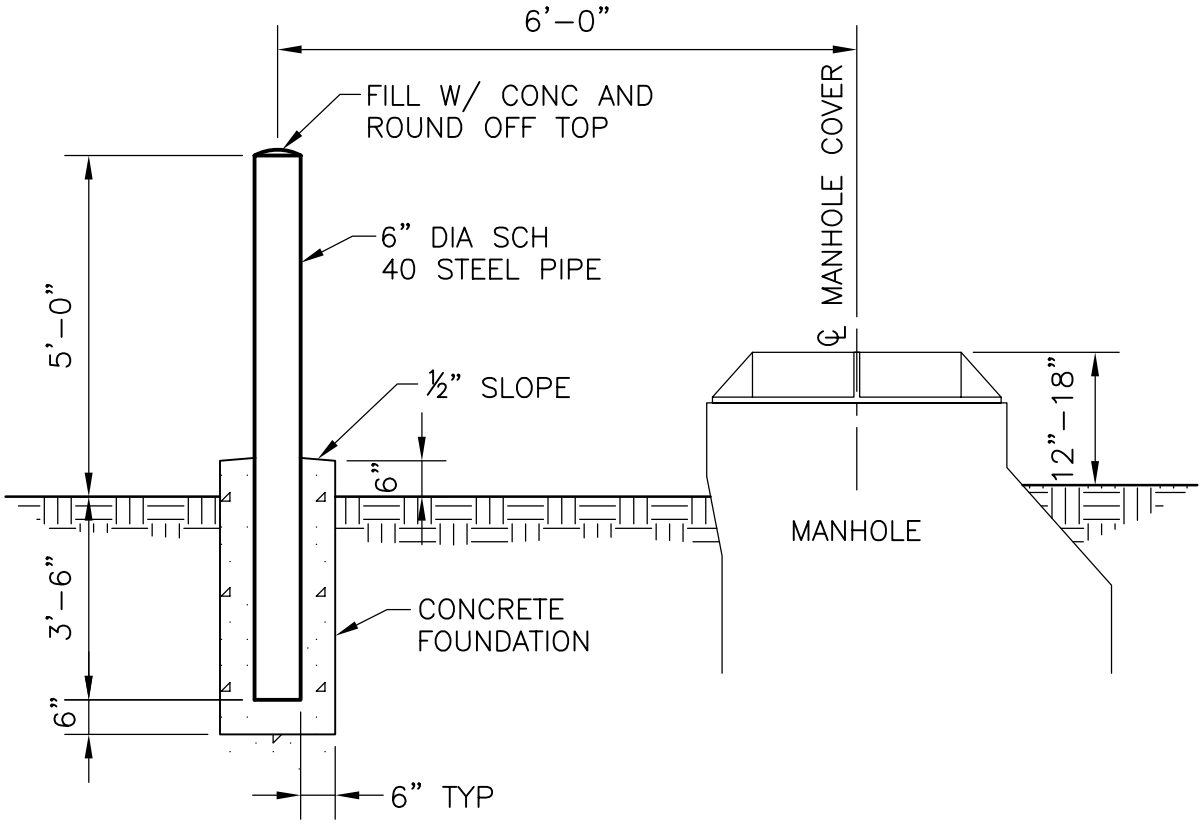

SECTION

MANHOLE LOCATION POST

DETAIL

NO SCALE

-

–

19

S:\5263\DETL\ DET-19 11/16/07 13:13 robinsonjd